Dimension Drawing - Lithium SuperPack	
BAT512060705	Lithium SuperPack 12.8V/60Ah (M6)

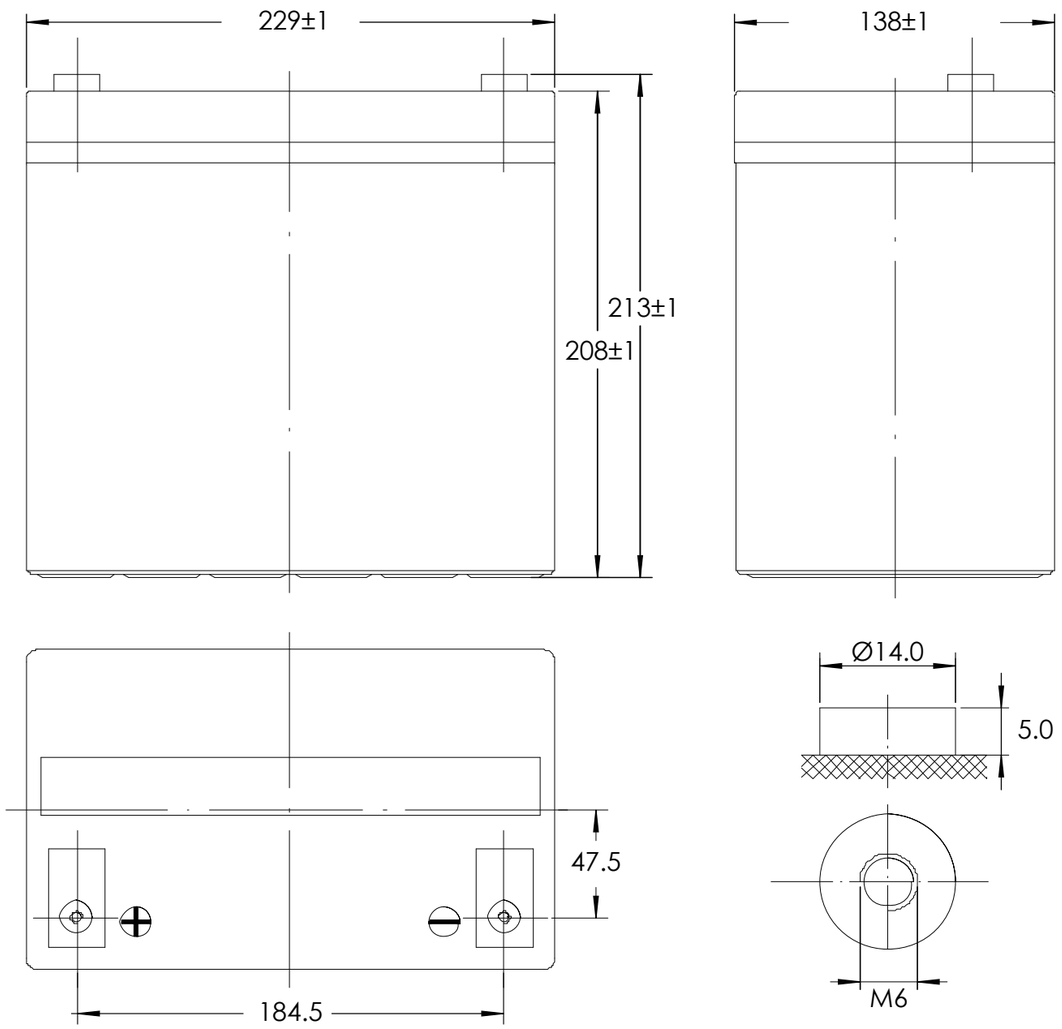

Dimensions in mm

victron energy
BLUE POWER