Dimension Drawing - DIN 35 adapter	
ADA500180100	DIN35 adapter large (2 pcs)

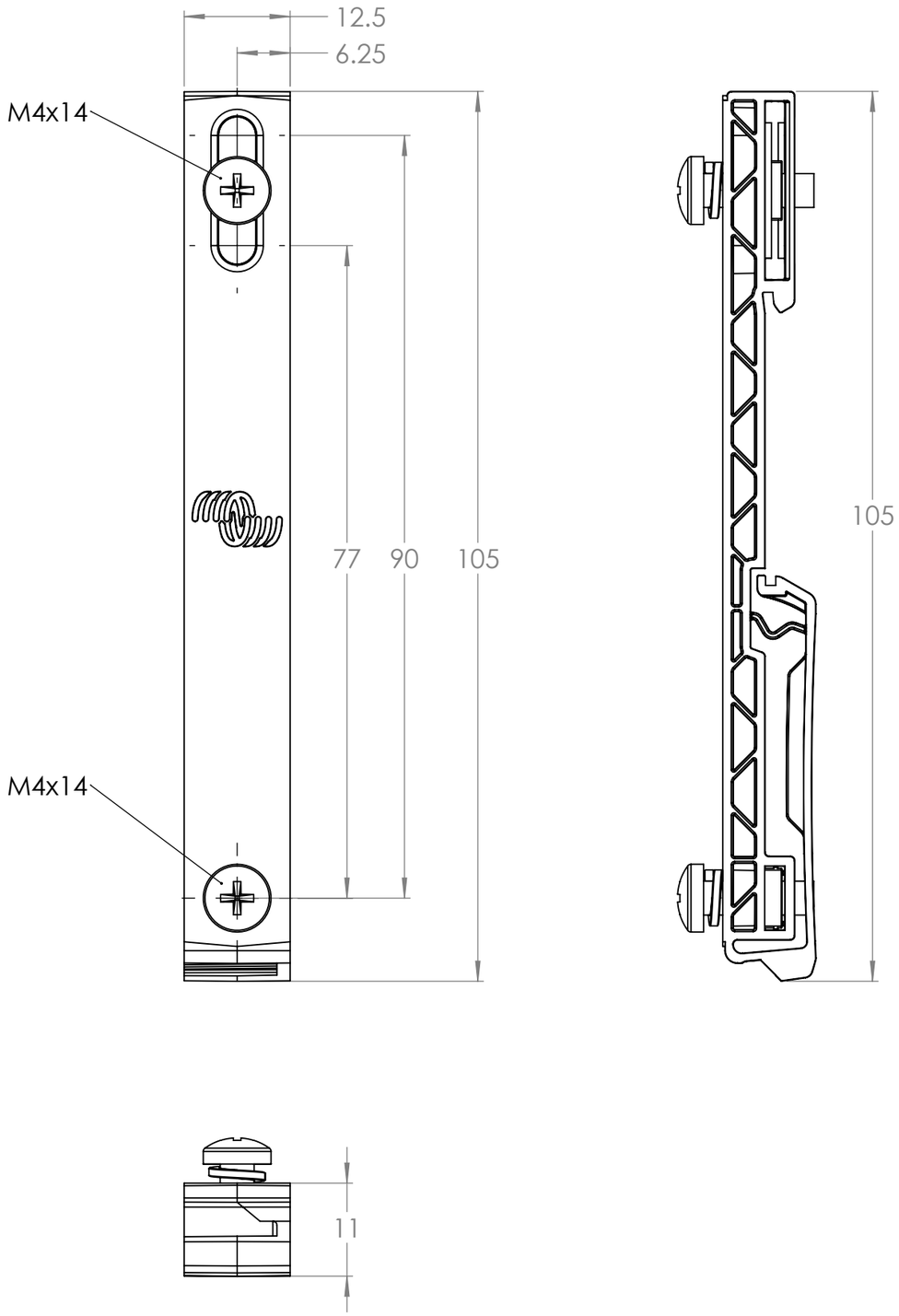

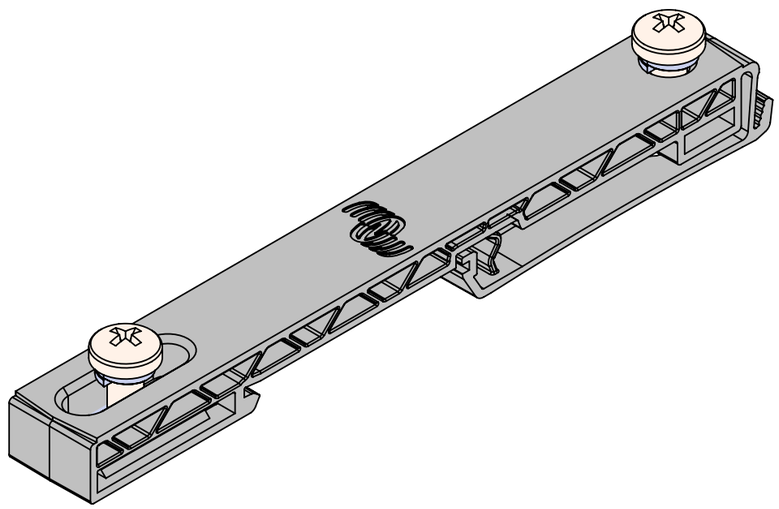

Dimensions in mm

victron energy
BLUE POWER

Rev00