Dimension Drawing - Phoenix Inverter Control VE.Direct	
REC040010210R	Phoenix Inverter Control VE.Direct

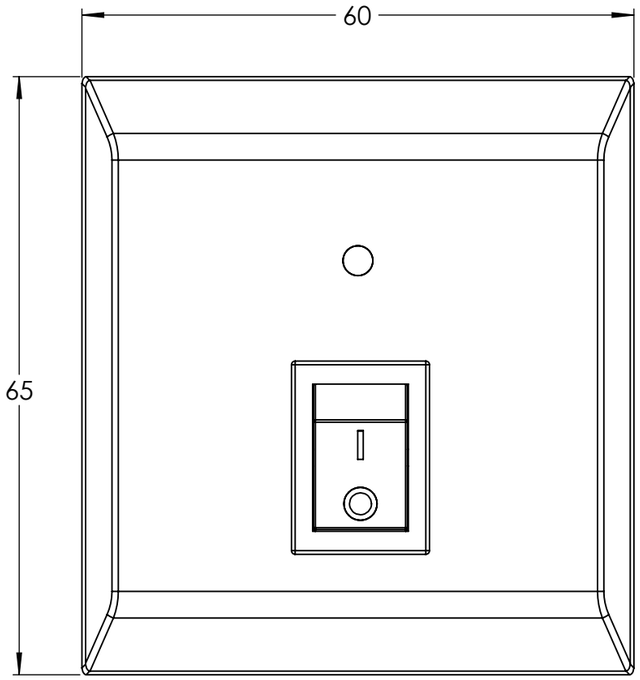

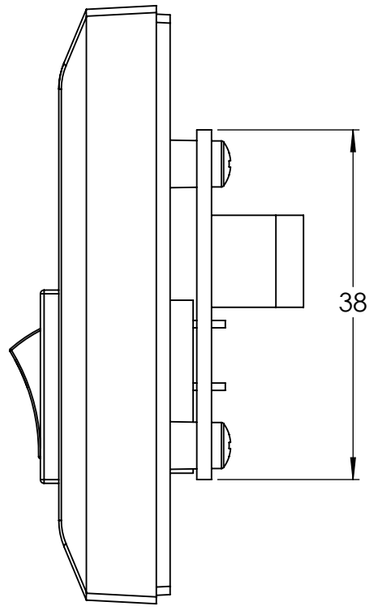

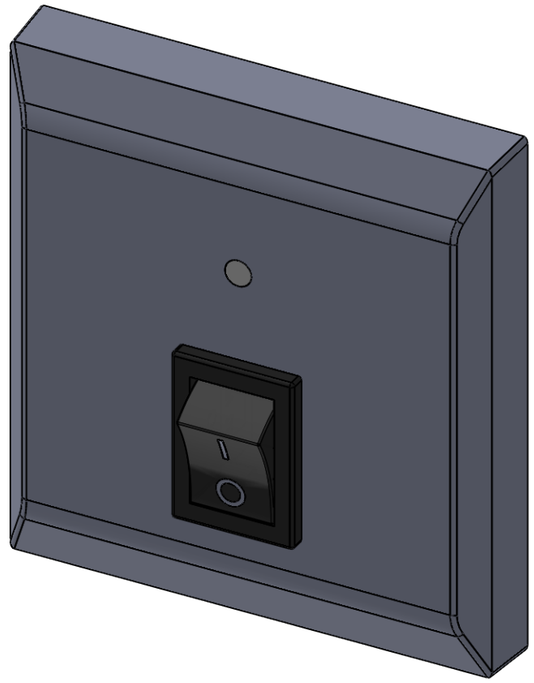

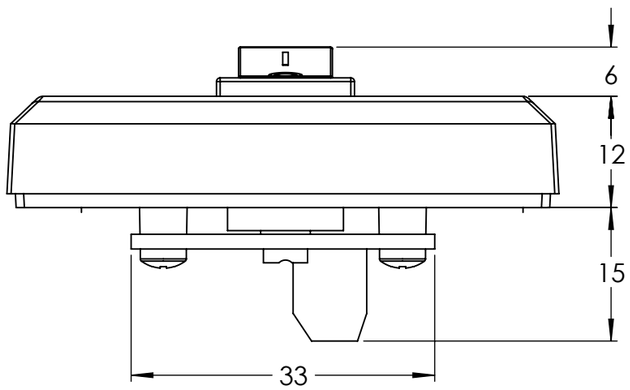

Dimensions in mm

victron energy
BLUE POWER